Available online www.jsaer.com

***Journal of Scientific and Engineering Research*, 2019, 6(5):214-218**

Research Article

ISSN: 2394-2630
CODEN(USA): JSERBR

Design and Implementation of an Incoming Call Detector using Discrete Components

Awuhe, T. Samuel*[1], Tingir, T. James[2], Odinya O. Jotham[3]

Department of Electrical and Electronics Engineering, Federal University of Agriculture Makurdi, P.M.B. 2373, Makurdi, Benue State, Nigeria
[1]samzfrter@gmail.com, [2]jaytinter@gmail.com, [3]jothamodinya@yahoo.com

Abstract This research designed, simulated and implemented a circuit that can detect incoming calls using discrete components. The design in this research incorporates Op-amp IC CA3130, an NPN transistor (2N3904), a piezo buzzer and LEDs as indicators all powered by a 9V Hi Watt battery. The antenna picks up signals sends it to the op amp which compares with a reference and gives an output. The output is sent to the buzzer via a transistor. Signals were picked from incoming call and the buzzer was energized as well as the LED. The design was simulated and constructed and results were satisfactory.

Keywords Call detector, Op-amp IC CA3130, NPN transistor (2N3904), Piezo Buzzer

1. Introduction

1.1. Background

The use of the cell phone has made communication easier and faster, integrating the world into a global village as people who are in different geographical locations are connected in seconds. There is need to limit the use of cell phones at some places and at specific times. A mobile phone (also known as a cellular-phone, cell-phone, a mobile, and a hand-phone) is a device that can make and receive phone-calls over a radio-link, while moving around a wide-geographic-area. Mobile phone uses radio frequency ranging from 700 to 2600 MHz in the GSM (Global System of Mobile communication) and LTE (Long Term Evolution) bands, that is the signal is high-frequency with huge-energy [1].

This research aims at designing and implementing a mobile phone call detector with discrete components .

To achieve this,

i. A circuit that can detect signals in the range of 0.9GHz to 3GHz has to be designed
ii. Produce a notification when the signals in the range of 0.9 GHz to 3 GHz are detected
iii. To design a system capable of detecting call signal in the range of one meters

Some works have been done similar to this research.

Madara *et al* [2] designed a mobile phone jammer. They made use of resistors, capacitors, inductors and transistors to design the jammer and also generate the required frequency (noise) and then amplify the frequency generated from the range of 800 MHZ to 1.4 GHZ in order to match the frequency of the mobile phone being transmitted by the base-station. Their proposed technique has a comparatively good jamming capability. The performance of their technique was confirmed by the blocking of the signals of the mobile phones in 2 G and 3 G networks operated via Safaricom, Airtell, Orange, and YU service-providers.

Kanwaljeet *et al* [3], developed a line follower robot designated to detect the use of mobile phones in restricted premises. When the robot detects RF signals transmitted from the mobile phone, it stops moving and sounds a beep alarm and the LED blinks for notification until when RF signals transmission stops. However, the robot cannot tell the exact location of the detected mobile phone. The robot cannot rotate at any particular angle which is less than 75 degree. To rotate less than 75 degree angle, more sensors and programming would be needed.

These designs are notably expensive. Hence the aim to design an incoming call detector usig discrete components.

2. Materials and Methods

2.1. Materials

The design in this research uses an Op-amp IC CA3130 which acts as a current to voltage converter. It is a CMOS version using gate-protected p-channel MOSFET transistors in the input to provide very high input impedance, very low input current and very high speed of performance.. it also uses a transistor **(2N3904)**.The **2N3904** is an NPN bipolar junction transistor used for low power amplifications and for switching purposes. In this research, it operates as a switch for the piezo buzzer. The piezo buzzer is an electronic device commonly used to produce sound. Its light weight, simple construction and low price make it usable in various applications as a sound indicator. The design is powered by 9 Volts HI-Watt DC batteries.

2.2 Methods

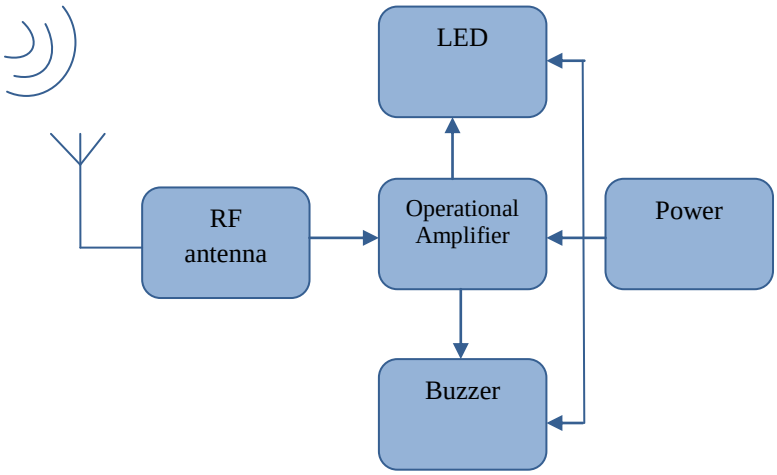

Figure 1: Block Diagram for call Detector

Op-amp IC CA3130 (IC1) is used in the circuit as a current-to-voltage converter with capacitor C3 connected between its inverting and non-inverting inputs. Capacitor C3 in conjunction with the lead inductance acts as a transmission line that intercepts the signals from the mobile phone. This capacitor creates a field, stores energy and transfers the stored energy in the form of minute current to the inputs of IC1.This will upset the balanced input of IC1 and convert the current into the corresponding output voltage. Capacitor C4 along with high-value resistor R1 keeps the non-inverting input stable for easy swing of the output to high state. Resistor R2 provides the discharge path for capacitor C4. Feedback resistor R3 makes the inverting input high when the output becomes high. Capacitor C5 (47pF) is connected across ‘’strobe’’ (pin 8) and ‘’null‟ inputs (pin 1) of IC1 for phase compensation and gain control to optimize the frequency response as shown in Figure 2. The value of the resistors are calculated by the relation

$$V_{non} = \frac{R_1 \, x \, V_s}{R_1 + R_2} \quad (1)$$

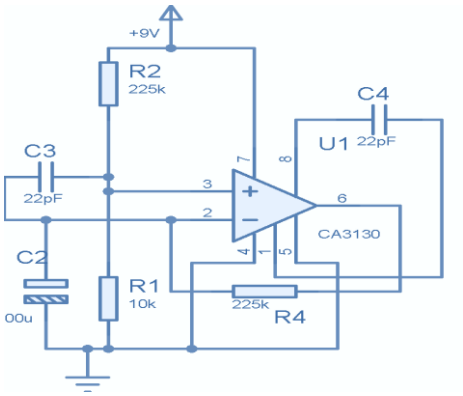

Figure 2: The Op Amp (IC3130) with designed parameter

The transistor is operated as a switch to drive the 5 V buzzer. The reason is, when a signal is detected the output pin of the detector sensor gives Voltage at a maximum current which is too small to drive a buzzer rated 5 V, 25 mA or even power on the LED. As a result, the transistor 2N3904 which is current driven is used in saturation and cut off modes to switch ON and OFF the buzzer.

To calculate the resistor values, we use the relation

$$I_B = \frac{V_{BE} - V_{BE}}{R_B} \quad (2)$$

Where I_B is given by the condition for saturation as

$$I_C < h_{FE} \times I_B \quad (3)$$

The transistor arrangement is shown in Figure 3

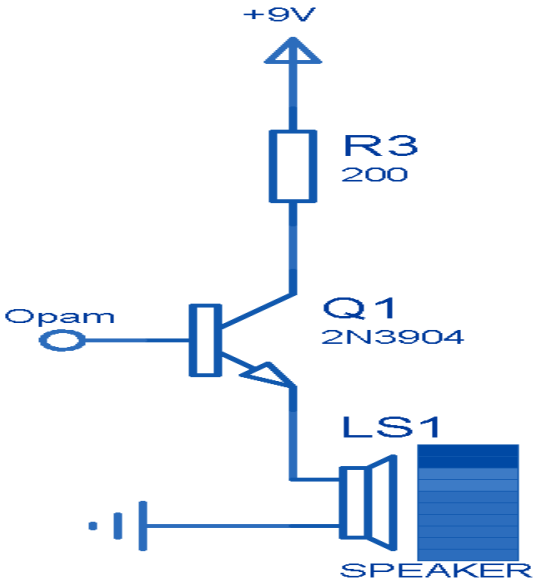

Figure 3: Transistor biased to switch on Buzzer with designed parameter

The Piezo Buzzer operates based on the phenomena of generating electricity when mechanical pressure is applied to certain materials and the vice versa.. When subjected to an alternating electric field they stretch or compress, in accordance with the frequency of the signal thereby producing sound. Figure 4 shows the pictorial diagram of a piezo buzzer.

Figure 4: A Piezo Buzzer

4. Results and Discussions

4.1 Simulation

After the analysis and design in the previous chapter, each part of incoming detector system circuit was simulated on Proteus version (8.6) using the values obtained in the analysis to ascertain the workability of each part. The simulated schematic is shown in Figure 5.

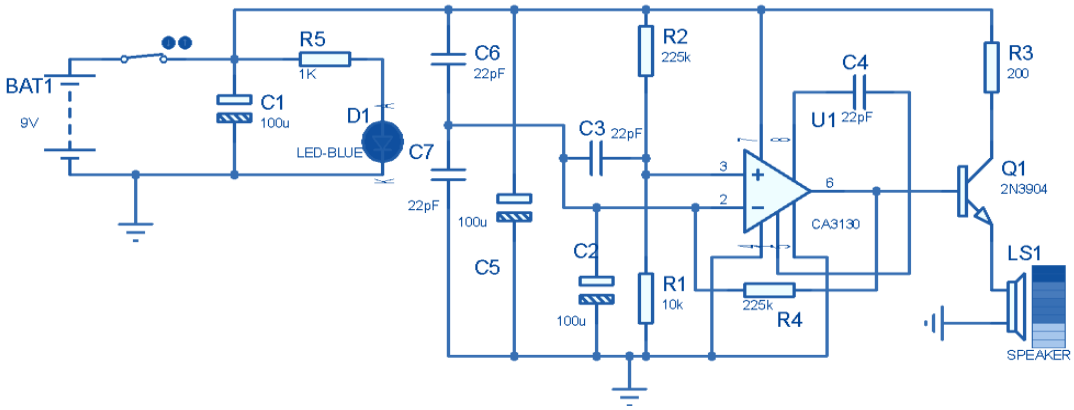

Figure 5: Simulation of the circuit

4.2. Construction

The components of the designed circuit were first of all interconnected on the bread board in order to test and ensure the workability of the design. After ascertaining the workability of the design, it was then transferred to Vero board.

The construction was done in successive stages; starting with the power supply of the incoming call detector part of the circuit and terminating at the switching ON and OFF of transistor carrying the buzzer part of the circuit. The implemented circuit is shown in Figure 6.

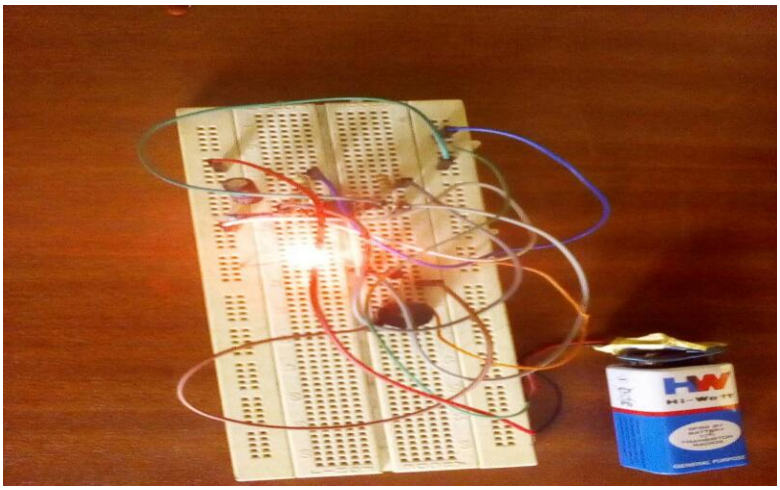

Figure 6: Implementation of circuit on breadboard

4.3 Discussion

This project work proves that information on an RF can easily be detected with discrete components**.** The total effort put in together in this design and construction of the detector device was aimed at solving the problem of cell phone detection. The design, construction and testing of the system was satisfactory and successfully carried out. The system was found very effective and operates in accordance with the design specifications.

5. Conclusion and Recommendation

5.1 Conclusion

When the circuits are powered, a remote user in the range of 1 meter with a mobile phone was detected when a call signal got to his phone.

This project has also afforded participants experience and knowledge in transmitting the theoretical knowledge already gained in the classroom to a practical project. This will go a long way in preparing the students for the challenges of real work environments.

5.2 Recommendation

Further research may be carried out to increase detection sensitivity and hence operation range; for this we recommend that a different properties of operational amplifier should be exploited other than the one used here.

References

[1]. Shon, P. (2006). "How College Students Cheat On In-Class Examinations: Creativity, Strain, and Techniques of Innovation", [Online] Available: http://hdl.handle.net/2027/spo.5240451.0001.010 (June 11, 2016).

[2]. Madara, D. S., Ataro, E. & Sitati, S. (2016). Design and Testing of a Mobile-Phone-Jammer. *Innovative Systems Design and Engineering*, Vol. **7**(7), pp. 7-18.

[3]. Kanwaljeet, S.; Mandeep, S. and Gupta, N. (2014)."Design and Implementation of Cell-Phone Detection based Line follower Robot", *International Journal of Electronics and Computer Science Engineering*, Vol. 1(3).