Available online www.jsaer.com

***Journal of Scientific and Engineering Research*, 2019, 6(11):146-150**

Research Article

ISSN: 2394-2630
CODEN(USA): JSERBR

Rupture Behaviour of Lettuce (*Lactuca sativa* L.) for Harvest Machine Development

Deniz YILMAZ

Department of Agricultural Machinery and Technologies Engineering, Faculty of Agriculture, Isparta University of Applied Sciences, Isparta, Turkey
Email: denizyilmaz@isparta.edu.tr

Abstract Lettuce (*Lactuca sativa* L.) is one of the most popular salad crops and occupies the largest production area among salad crops in the world. This study aimed to determine the rupture behaviour of Lettuce (*Lactuca sativa* L.) for harvest machine development. In this purpose, rupture behaviours as the maximum force, stress in the maximum force point, work at maximum force point, shearing force, deformation at maximum force, bioyield force, and shearing stress of Lettuce (*Lactuca sativa* L.) leaf have determined. Average values for maximum force, stress and energy in maximum force were determined as 14.420N, 0.286MPa and 0.088 J at leaf, respectively. The shearing force and shearing stress were found to be as 8.598N and 0.161 MPa, respectively. Average values for bioyield force were determined to be 11.536 N. These features can be used in determining the design and operating conditions for the mechanical harvester cutting blade.

Keywords Lettuce (*Lactuca sativa* L.), rupture, strength, mechanical harvesting

Introduction

Lettuce (*Lactuca sativa* L.) is considered as the most important vegetable in the group of leafy vegetables. It is almost exclusively used as a fresh vegetable in salads, but some forms are also cooked [1, 2, 3]. Lettuce is produced commercially in many countries worldwide and is also widely grown as a vegetable in home gardens [2]. It is especially important as a commercial crop in Asia, North and Central America, and Europe. China, U.S., Spain, Italy, India and Japan are among the world's largest producers [3, 4]. Lettuce is rich in vitamin A and minerals like calcium and iron.

Figure 1: Lettuce (Lactuca sativa L.)

It has 23 000 (1000 ha) of farmland in Turkey. 3,4 percent of this area (809 000 ha) used for vegetable production. Vegetable production has been increasing in recent years. According to 2018 data; the Lettuce (*Lactuca sativa* L.) production volume is 187.658 tons in Turkey. The vegetable mechanization is mostly conducted by hand in Turkey. Mechanization is needed due to the increase in production area.

Mechanical properties are closely related to texture, but could also influence other aspects of post process quality, such as the propensity for tissue cracking, providing sites for the growth of micro-organisms. In addition, the susceptibility of the lettuce tissue to mechanical damage may contribute towards discolouration [5]. Generally studies of lettuce postharvest have been limited to sensory attributes, appearance and marketable head weight [6], and wilting, decay and physiological disorders, in relation to packaging, processing and storage conditions [7].

This study covers determination of maximum force, bioyield force, shearing force, stress and energy in maximum force, shearing deformation and shearing stress of Lettuce (*Lactuca sativa* L.) leaf.

Materials and Methods

For this study, Lettuce (*Lactuca sativa* L.) plants were harvested by hand from the greenhouse in the Isparta province, Turkey.

Diameter and cross-sectional area of the experimental samples were measured before the shearing tests. Moisture content of the plants was determined at harvest time. Specimens were weighed and dried in an oven at 102°C for 24 h and then reweighed [8]. It was provided concise but complete information about the materials and the analytical and statistical procedures used.

A universal testing machine (LF Plus, UK) with a 500 N load cell and a computer-aided cutting and picking apparatus (Fig. 2, Fig. 3) was used to measure the rupture behaviours of the Lettuce (*Lactuca sativa* L.) plant. Knife material was hardened iron. All the tests were carried out at a speed 1.0 mm s^{-1}, and data were recorded at 10 Hz. All data were analyzed by nexygen software program.

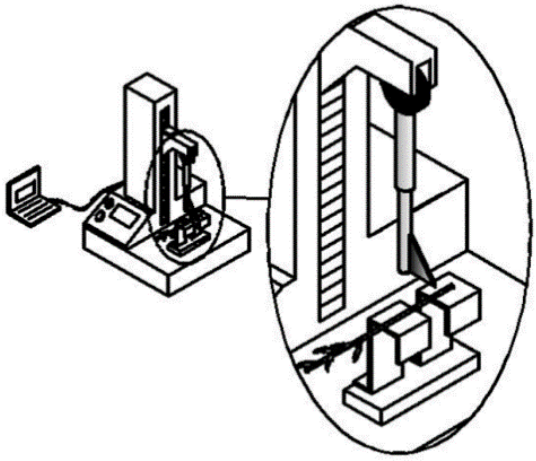

Figure 2: Cutting system

The shearing forces on the load cell with respect to knife penetration were recorded by computer.

The shearing stress in N/mm^2 was calculated using the equation of [9]:

$$\tau = \frac{F_{s\max}}{A} \quad (1)$$

Where Fs_{max} is the maximum shearing force of the curve in N, and A is the area of the leaf at the deformation cross-section in mm^2.

The Lettuce (*Lactuca sativa* L.) leaves were attached to the apparatus from its leaves (Fig. 3). The shearing tests were conducted with 0.8 mms^{-1} knife speed progress [10].

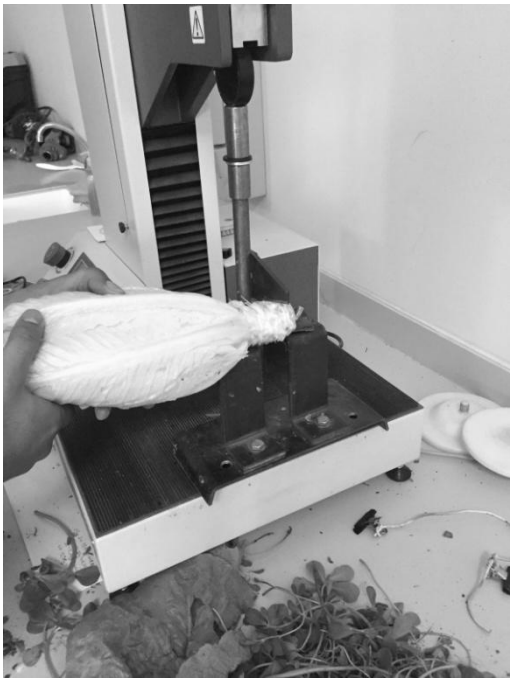

Figure 3: Measuring the cutting of Lettuce (Lactuca sativa L.) leaf

Leaf force can be defined as the force required to separate leaf from ovary point (picking force of leaves). The load cell of the machine was then pulled upward to determine the leaf force of the Lettuce (*Lactuca sativa* L.) leaf (Figure 4).

Figure 4: Measuring the leaf force of Lettuce (Lactuca sativa L.) leaf

Maximum force, bioyield force, shearing force, stress and energy in maximum force, shearing stress and shearing deformation were calculated from the force-deformation curves at the inflection point as defined by ASAE Standard (1985). S368.1 [11] was obtained from all curves (Figure 5).The energy of shearing was determined as the area under these curves [12,13].

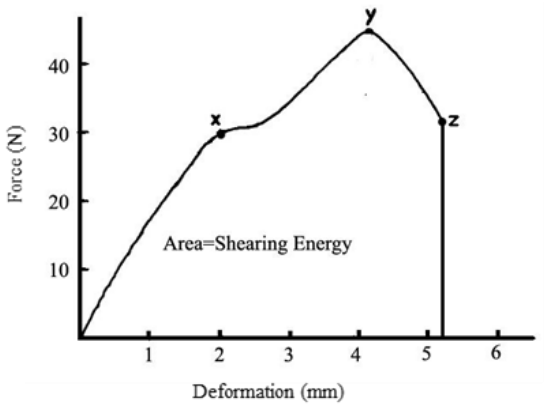

Note. Labels on the graph indicate the following points:
x – bioyield force, y – maximum force, z – shearing force [14]

Figure 5: Typical force-deformation curve of Lettuce (Lactuca sativa L.) leaf during shearing loading

Results and Discussions

Moisture content of the Lettuce (*Lactuca sativa* L.) was determined as 88.9% at harvest time and all tests were conducted at harvest moisture. The rupture behaviours of Lettuce (*Lactuca sativa* L.) leaf during the cutting are given in Table 1.The maximum force was observed as 14.420 N at Lettuce (*Lactuca sativa* L.) leaf. The bioyield force of 11.536 N was observed at leaf for cutting.

Table 1: Average rupture behaviour of Lettuce (*Lactuca sativa* L.) leaf in during the cutting

	Maximum force (N)	**Bioyield force (N)**	**Shearing force (N)**	**Stress in maximum force (MPa)**	**Energy in maximum force (J)**	**Shearing stress (MPa)**	**Shearing deformation (mm)**	**Area (mm ^{2})**
Leaf	14.420	11.536	8.598	0.286	0.088	0.161	29.275	54.592
Standard Deviation	4.431	2.945	1.699	0.087	0.024	0.081	2.361	3.487

Shearing force is one of the most important plant characteristics affecting plant harvesting. If the weight of the plant is known, the shearing force and the shearing height can be used to determine the speed of the blade to be used in harvesting [15, 16]. The maximum shearing force was observed as 8.598 N at leaf in cutting time. The stress value in maximum force as 0.161MPa was observed at leaf in cutting.

The energy at maximum force was found to be as 0.088 J. Deformation has an important place among the rupture behaviours of the plant. The maximum shearing deformation (29.275 mm) was observed at leaf. The average cross-sectional area of Lettuce (*Lactuca sativa* L.) was determined as 54.592 mm^2 at harvest moisture (88.9 %). The rupture behaviours of Lettuce (*Lactuca sativa* L.) leaf during the picking are given in Table 2.

Table 2: Average rupture behaviours of Lettuce (*Lactuca sativa* L.) leaf during the picking

	Maximum force (N)	**Bioyield force (N)**	**Shearing force (N)**	**Stress in maximum force (MPa)**	**Energy in maximum force (J)**	**Shearing deformation (mm)**
Leaf	3.600	2.880	2.401	0.359	0.026	12.358
Standard Deviation	0.685	0.788	0.876	0.064	0.011	4.211

The maximum force required to separate leaf from body was determined as 3.600 N. As a function of the maximum force the bioyield force was found to be 12.880 N. Lower shearing forces required for mechanical harvesting leads to savings in power and energy usage. Leaf shearing force of Lettuce (*Lactuca sativa* L.) observed 2.401 N. The maximum stress in maximum force value (0.359 MPa) was observed at leaf. The energy at maximum force was found to be as 0.026 J. The average shearing deformation value of Lettuce (*Lactuca sativa* L.) leaf was found as 12.358 mm.

Conclusions

This study was carried out to determine the rupture behaviours of Lettuce (*Lactuca sativa* L.). Properties as the maximum force, bioyield force, shearing force, stress in maximum force, energy in maximum force, shearing stress, and shearing deformation of Lettuce (*Lactuca sativa* L.) leaf. The rupture behaviours measured at root section higher than that of the leaf sections.

References

[1]. Křístková, E., Doležalová, I., Lebeda, A., Vinter, V., Novotná A., (2008). Description of morphological characters of lettuce (*Lactuca sativa* L.) genetic resources. *Hort. Sci.* (Prague), 35, 2008 (3): 113–129.

[2]. Rubatzky, V.E., Yamaguchi M., (1997). World Vegetables.*New York, Chapman & Hall*.

[3]. Lebeda A., Ryder E.J., Grube R., DoleŽalovÁ I., KŘÍstkovÁ E.(2007). Lettuce (Asteraceae; Lactuca spp.). In: SINGH R.J. (ed.), Genetic Resources, Chromosome Engineering, and Crop Improvement, Vol. 3, Vegetable Crops. BocaRaton, *CRC Press, Tailor and Francis Group*: 377–472.

[4]. MouB. (2008). Lettuce. In: PROHENS J., NUEZ F. (eds), Handbook of Plant Breeding. Vegetables I. Asteraceae, Brassicaceae, Chenopodiaceae, and Cucurbitaceae. NewYork, Springer Science: 75–116.

[5]. Newman, J.M., Hilton, H.W., Clifford, S. C., Smith, A.C. (2005). The mechanical properties of lettuce: A comparison of some agronomic and postharvest effects. *Journal of Materials Science* 40. 1101–1104

[6]. Wurr, D. C. E., Fellows J.R., Hadley, P,. (1986) *J. Hortic. Sci.* 61 325.

[7]. Alsadon, AA. (1993). *Hort sci.* 28, 159.

[8]. ASABE Standards. (2006). Moisture measurement e Forages. St. Joseph, MI: American Society of Agricultural and Biological Engineers (ASABE). S358.2

[9]. Shahbazi, F., NazariGaledar, M., (2012). Bending and shearing properties of safflower stalk. *Journal of Agricultural Science and Technology*, 14(4), 743-754.

[10]. Simonton, W., (1992). Physical properties of zonal geranium cuttings. *Trans. ASAE*, 35(6): 1899-1904.

[11]. ASAE Standards. (1985). Compression test of food materials of convex shape. St. Joseph, Mich.: *American Society of Agriculture Engineering*, S368.1

[12]. Chen, Y., Gratton, J. L., Liu, J., (2004). Power requirements of hemp cutting and conditioning. *Biosystems Engineering*, 87(4), 417-424.

[13]. Srivastava, A.K., Goering, C.E., Rohrbach, R.P., Buckmaster, D.R., (2006). Engineering principles of agricultural machines (2nd ed.). *American Society of Agricultural and Biological Engineers, St. Joseph, USA, p. 185.*

[14]. Liu, T. (2012). Load modelling for sharp V-cutter cutting litchi (Litchi chinensis Sonn.) stalk. *Afric. J. Biotechn*., 11(14): 3250-3258

[15]. Igathinathane, C., Womac, A. R., Sokhansanj, S., (2010). Corn stalk orientation effect on mechanical cutting. *Biosystems engineering*, 107(2), 97-106.

[16]. Taghijarah, H., Ahmadi, H., Ghahderijani, M., Tavakoli, M., (2011). Shearing characteristics of sugar cane (Saccharum officinarum L.) stalks as a function of the rate of the applied force. Australian Journal of Crop Science, 5(6), 630.